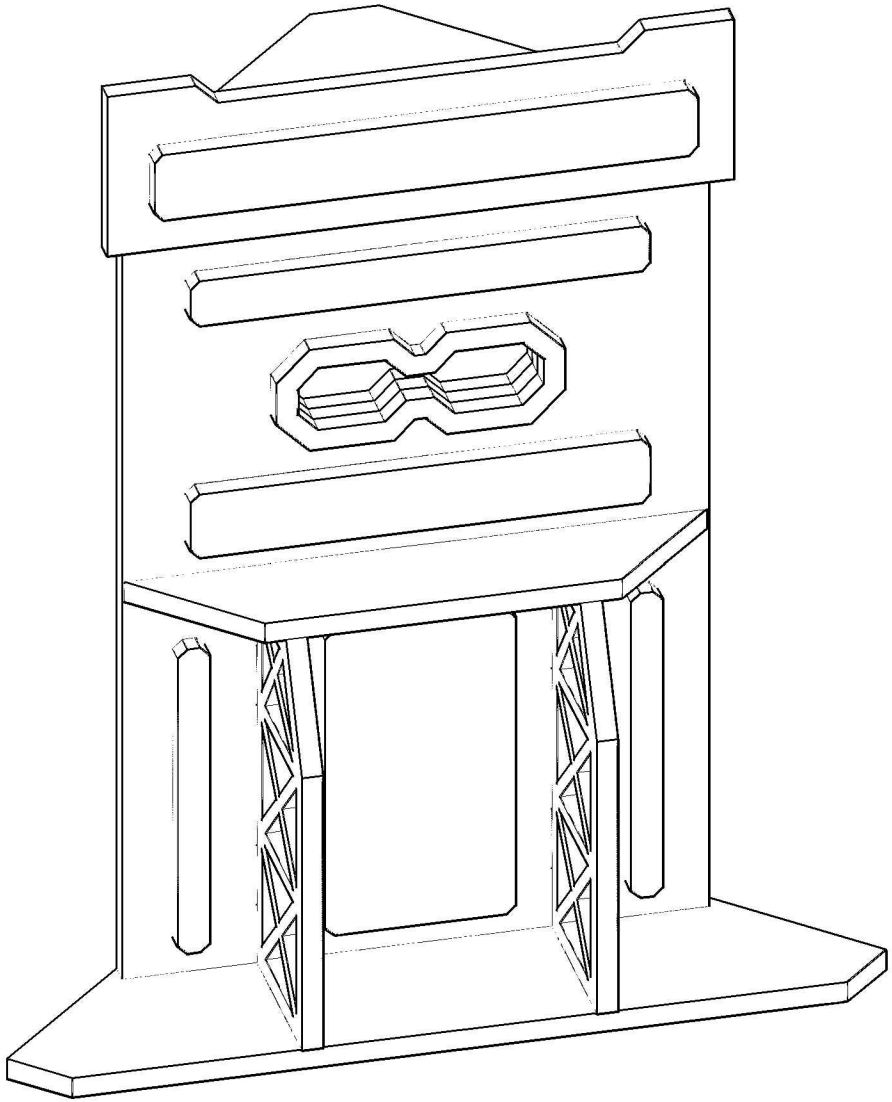

LASER CRAFT WORKSHOP

WALL - OUTSIDE CORNER

ASSEMBLED

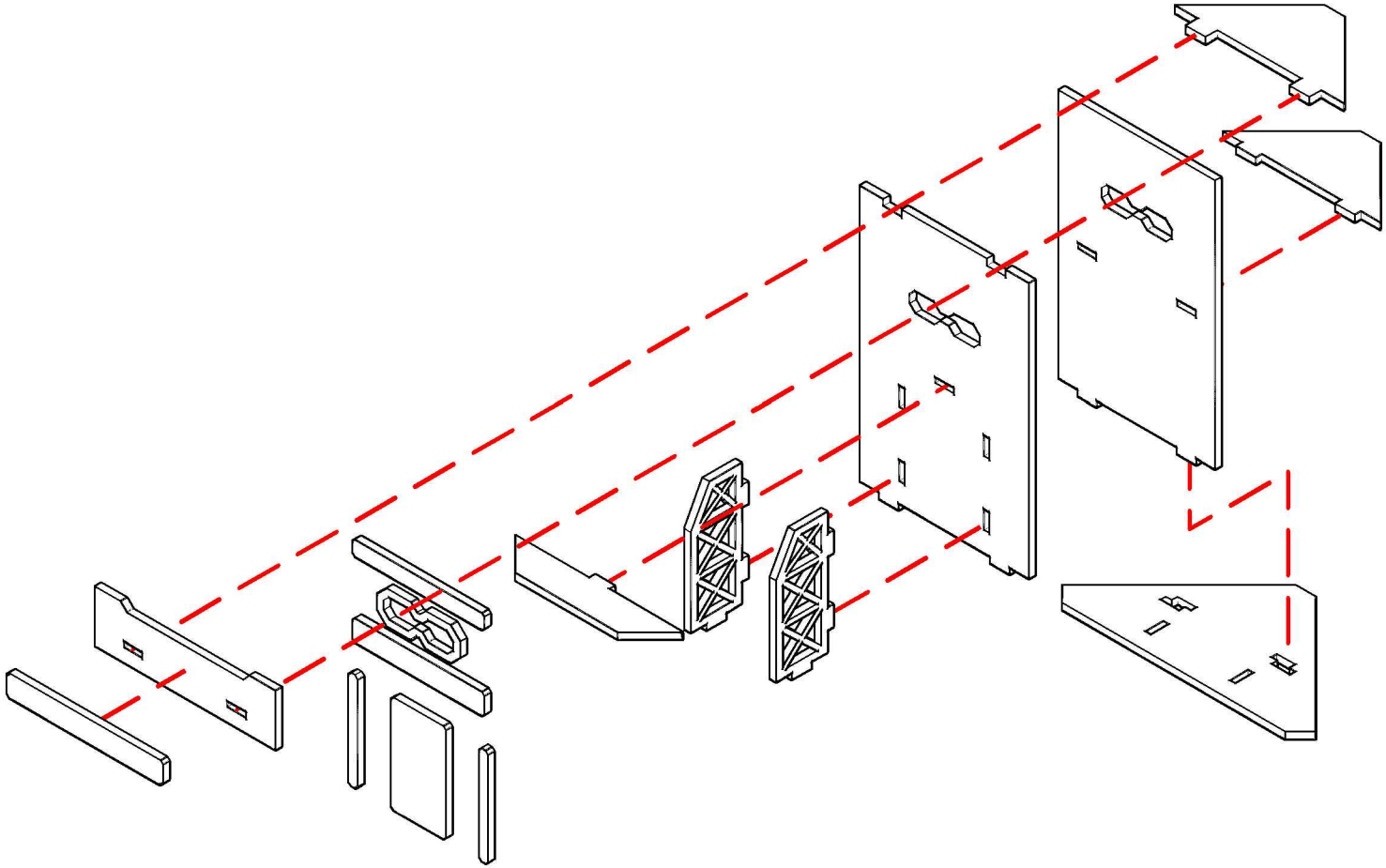

LASER CRAFT WORKSHOP

WALL - OUTSIDE CORNER

ASSEMBLY