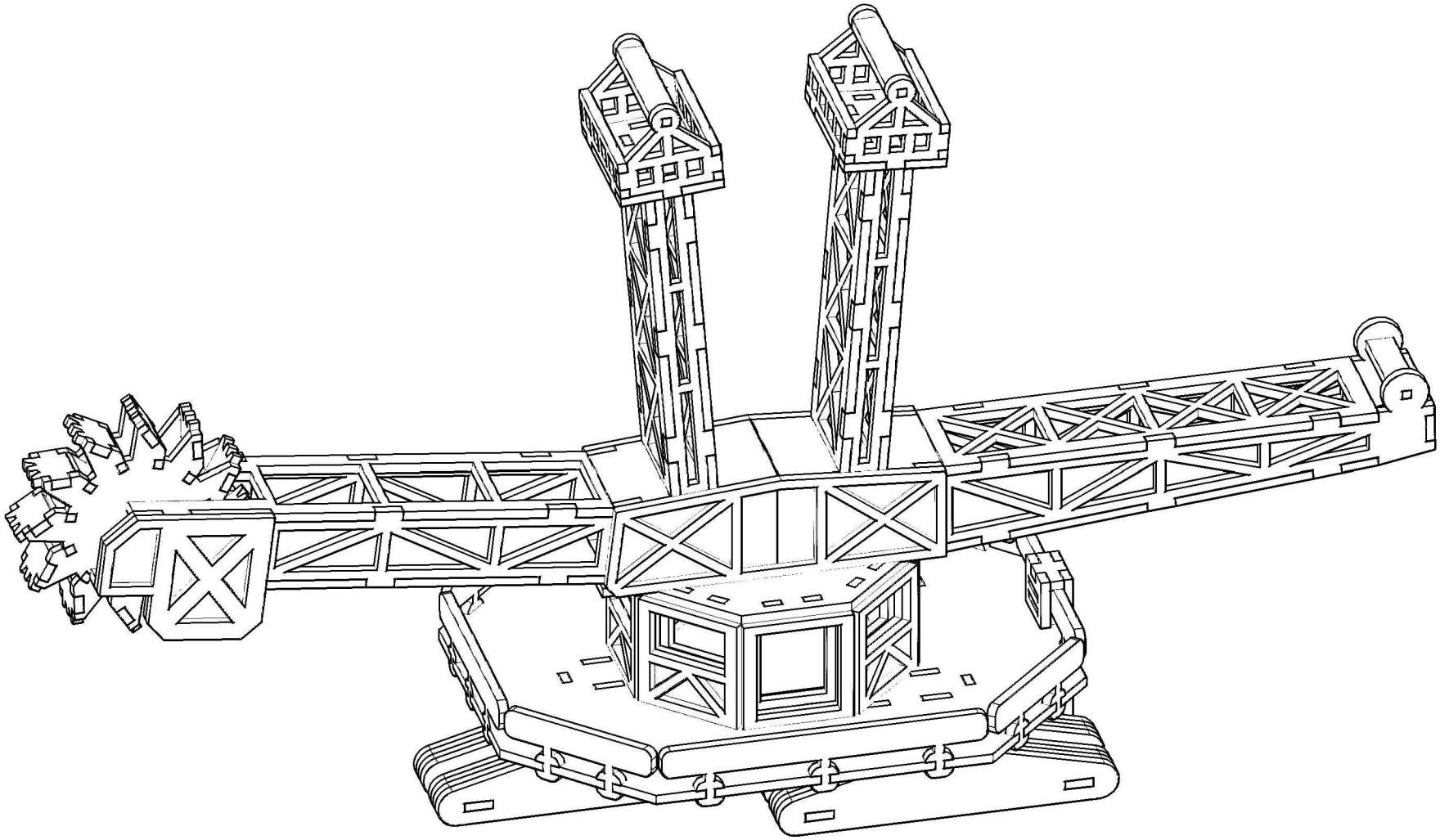

LASER CRAFT WORKSHOP

BEHEMOTH

ASSEMBLED

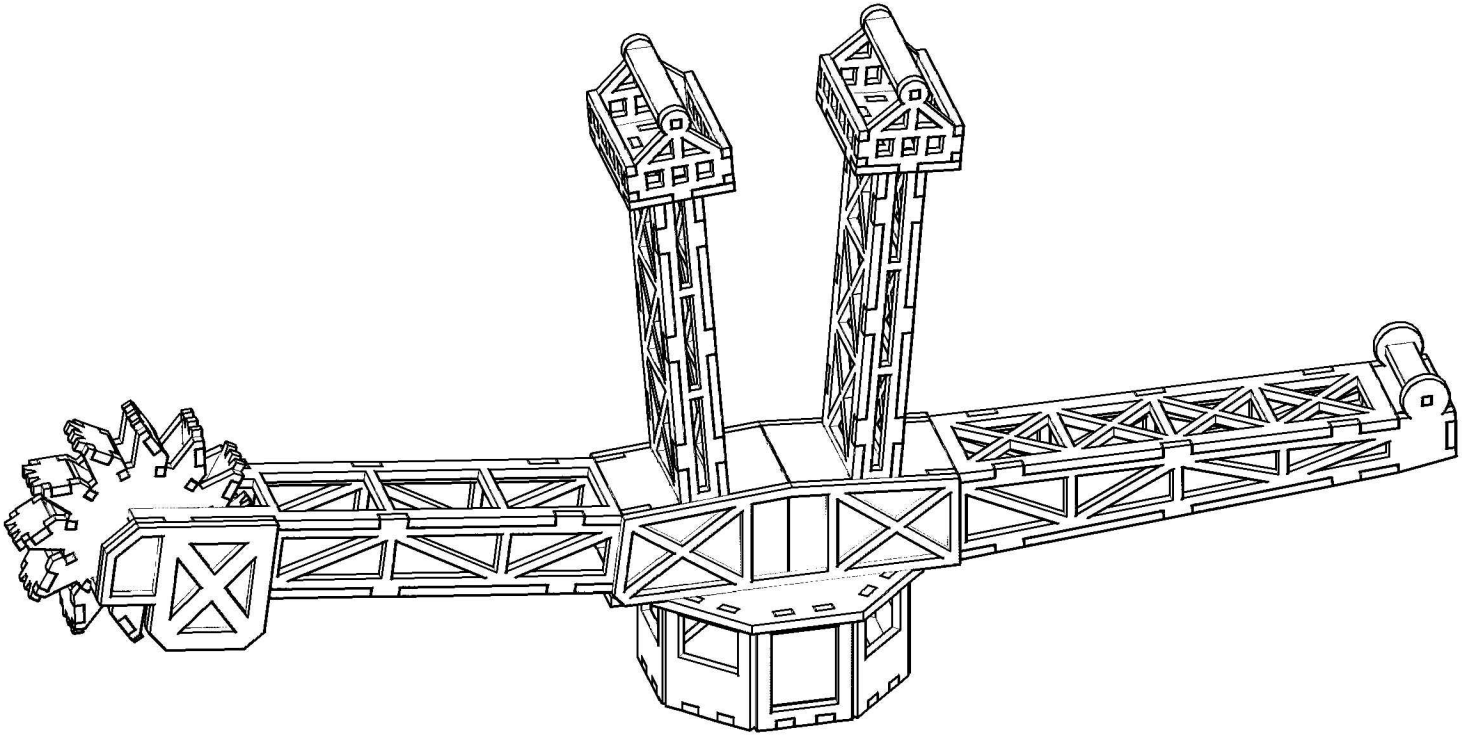

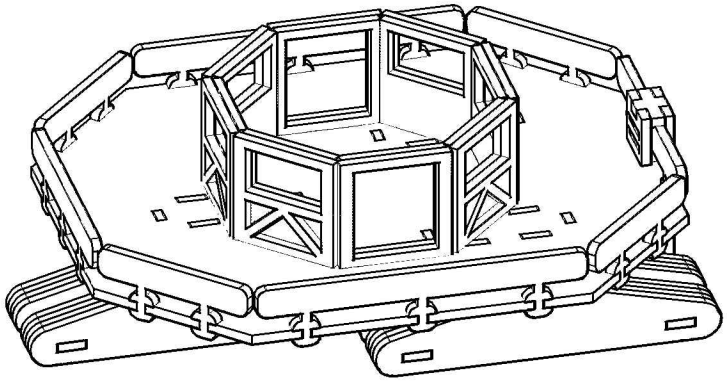

LASER CRAFT WORKSHOP

BEHEMOTH

LAYERS

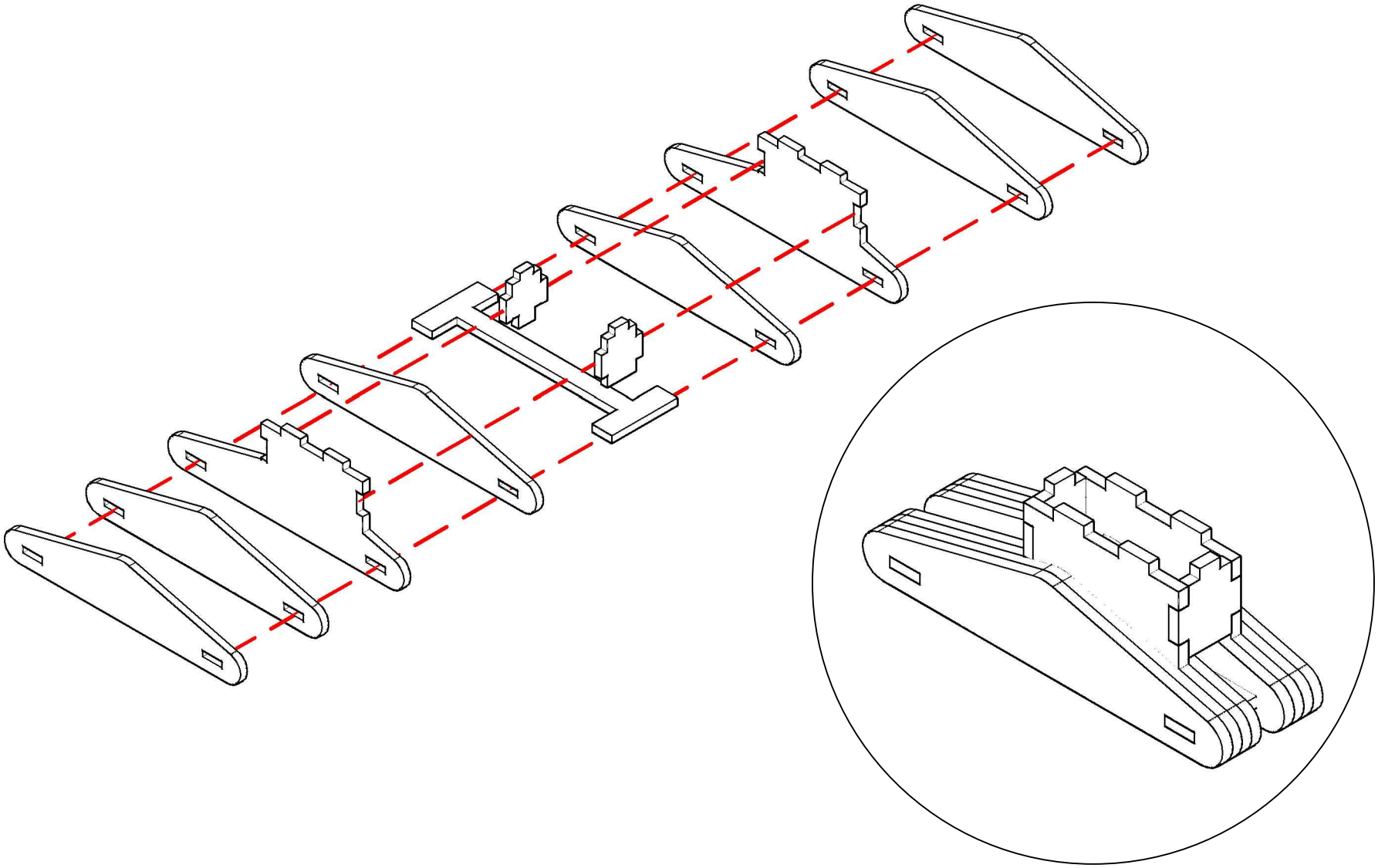

LASER CRAFT WORKSHOP

BEHEMOTH

TRACK ASSBY

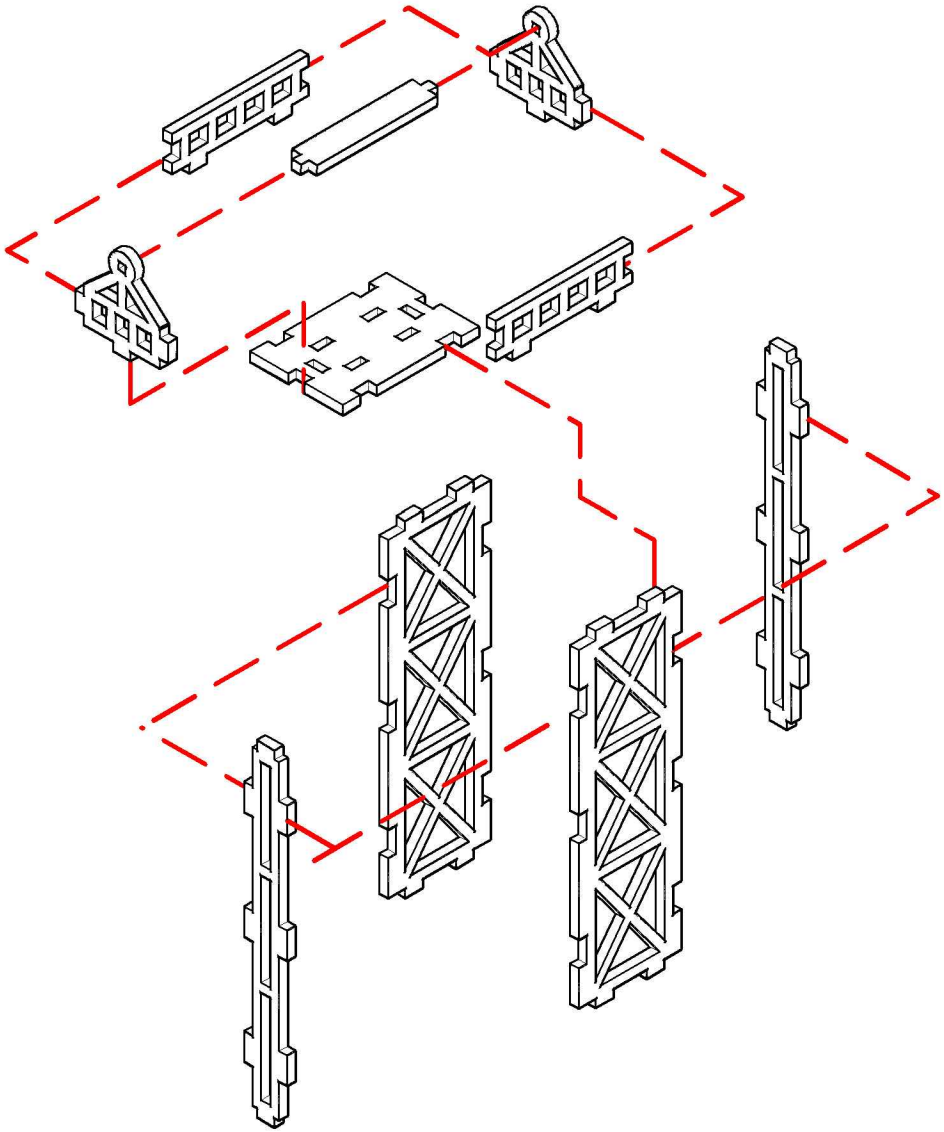

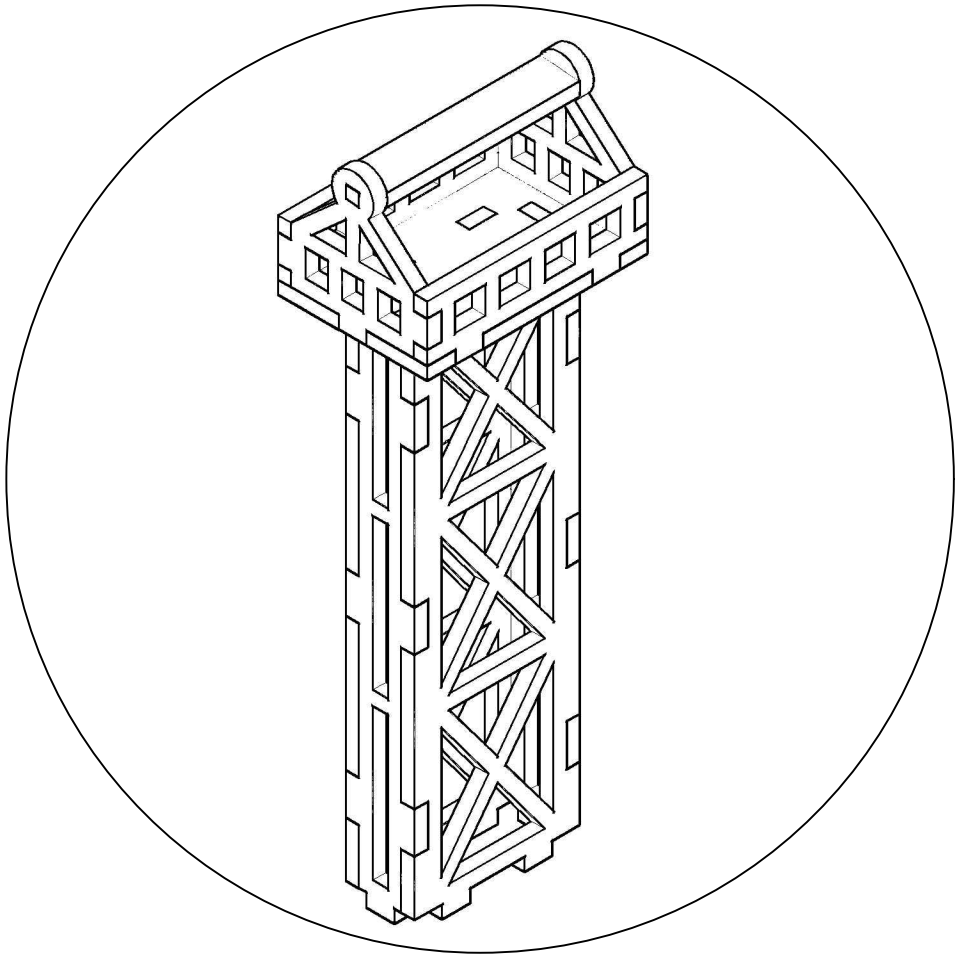

LASER CRAFT WORKSHOP

BEHEMOTH

TOWER ASSBY

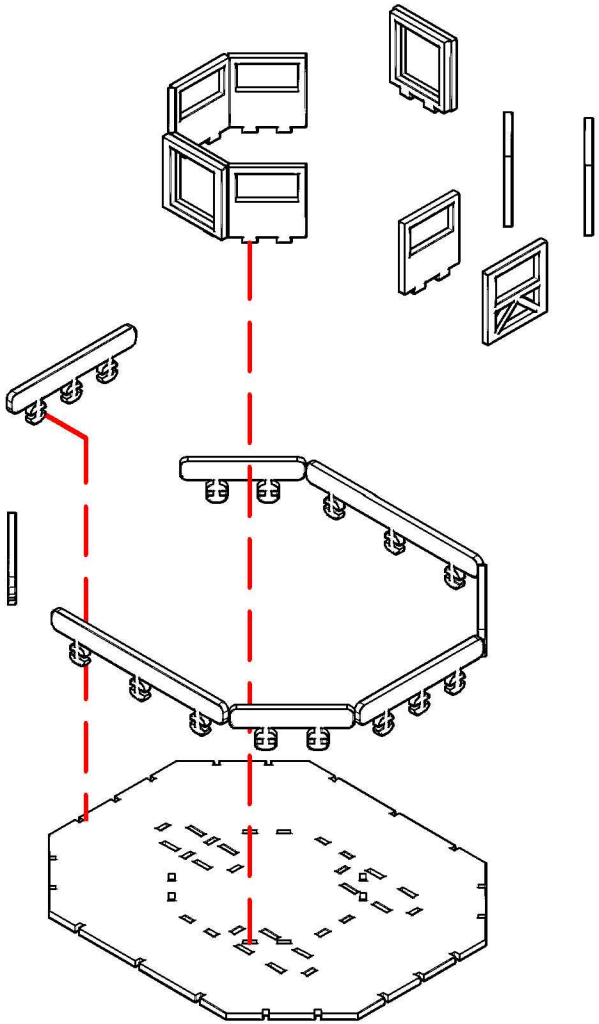

LASER CRAFT WORKSHOP

BEHEMOTH

PLATFORM

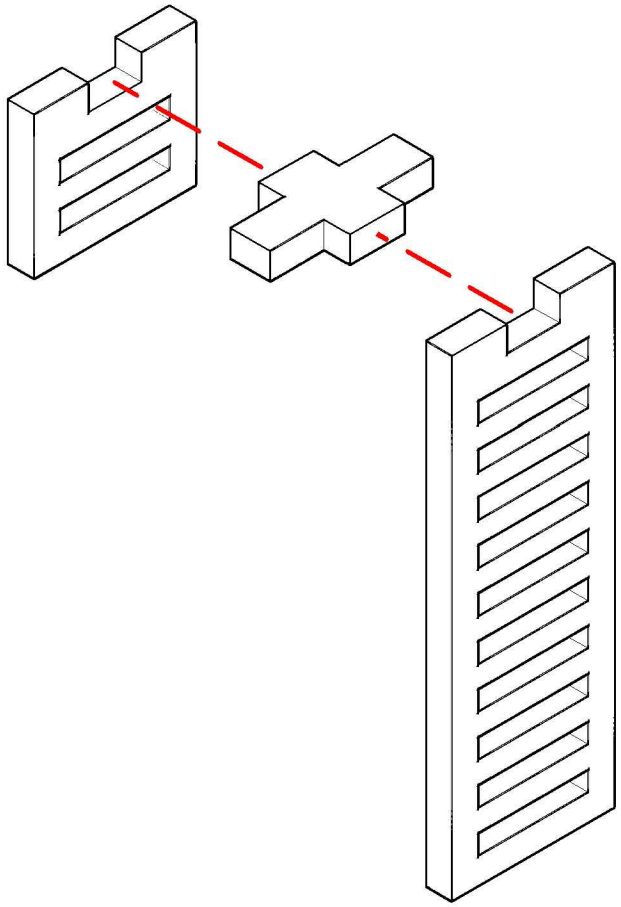

LASER CRAFT WORKSHOP

BEHEMOTH

LADDER

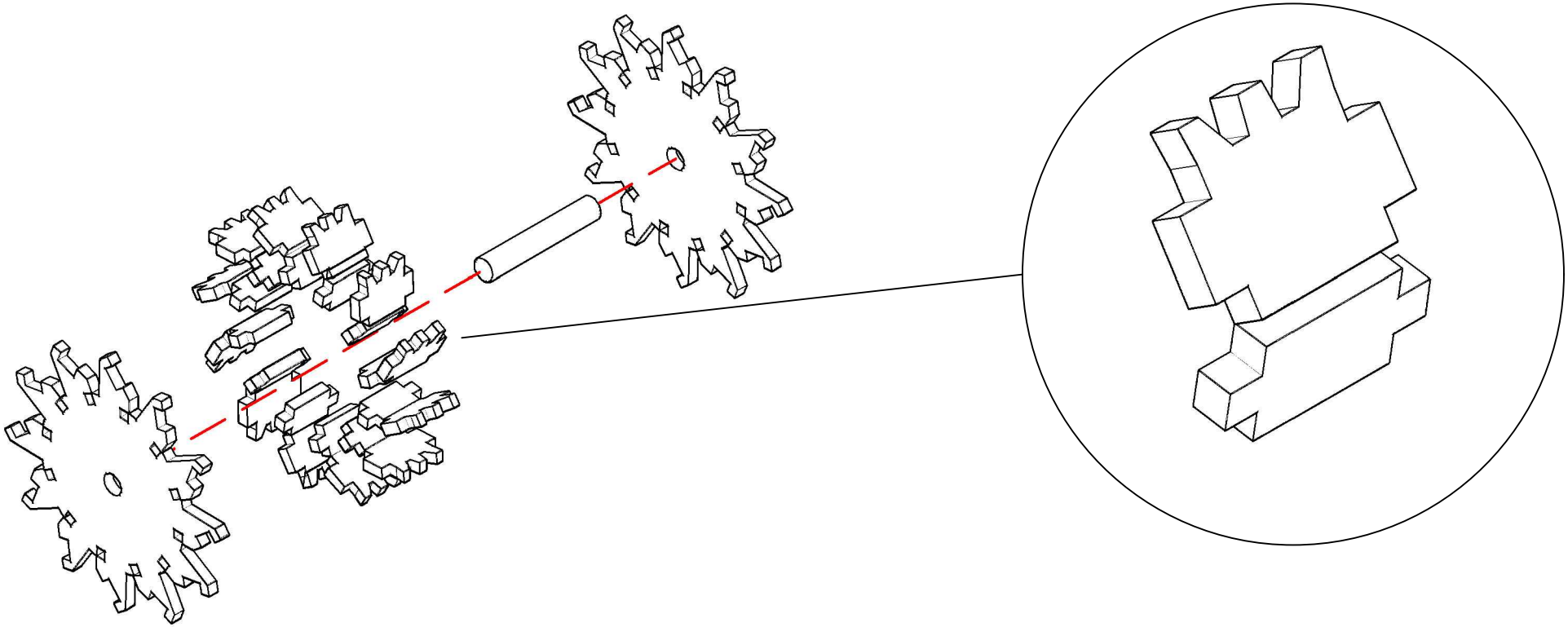

LASER CRAFT WORKSHOP

BEHEMOTH

BUCKET WHEEL

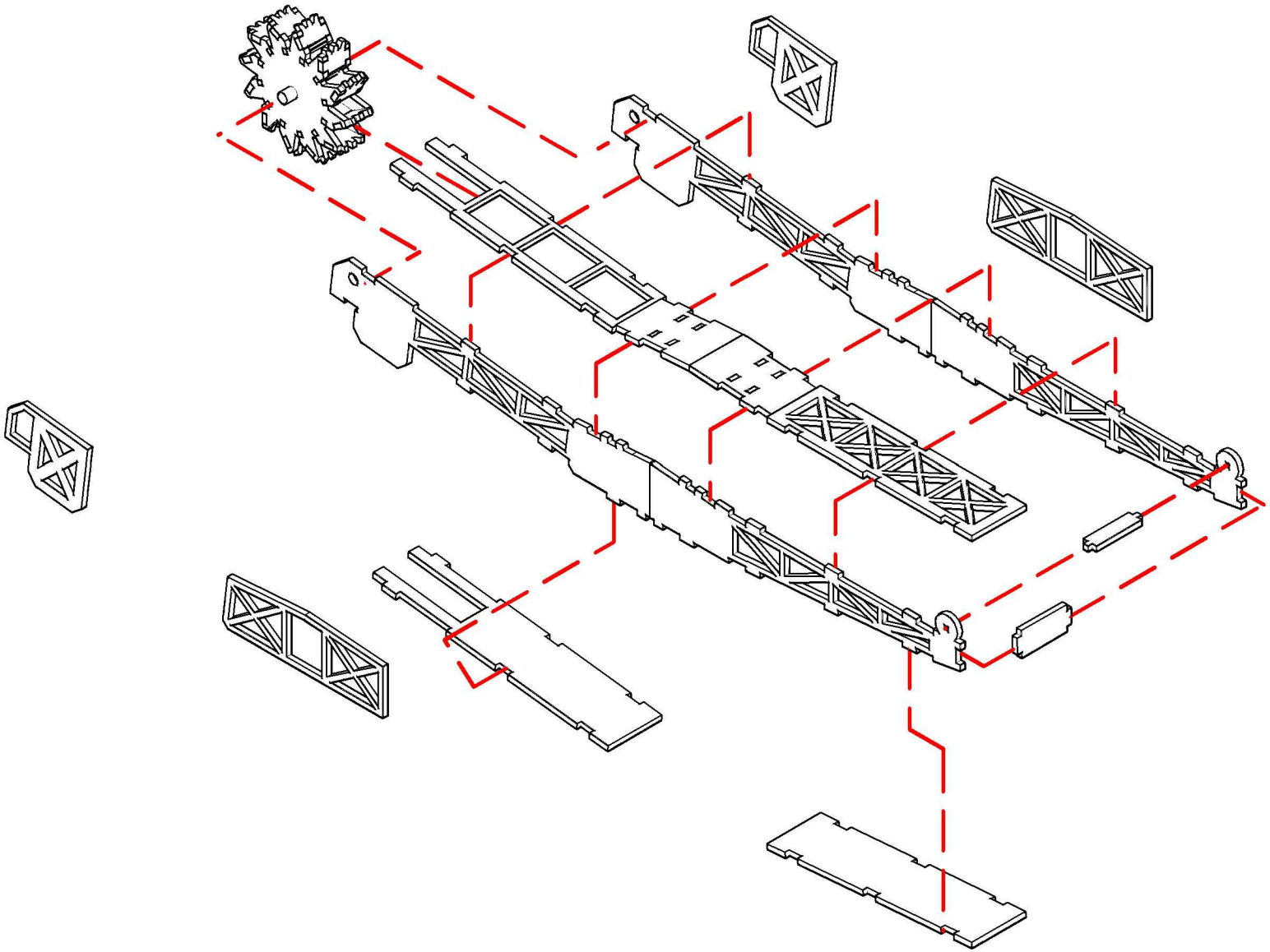

LASER CRAFT WORKSHOP

BEHEMOTH

CONVEYOR

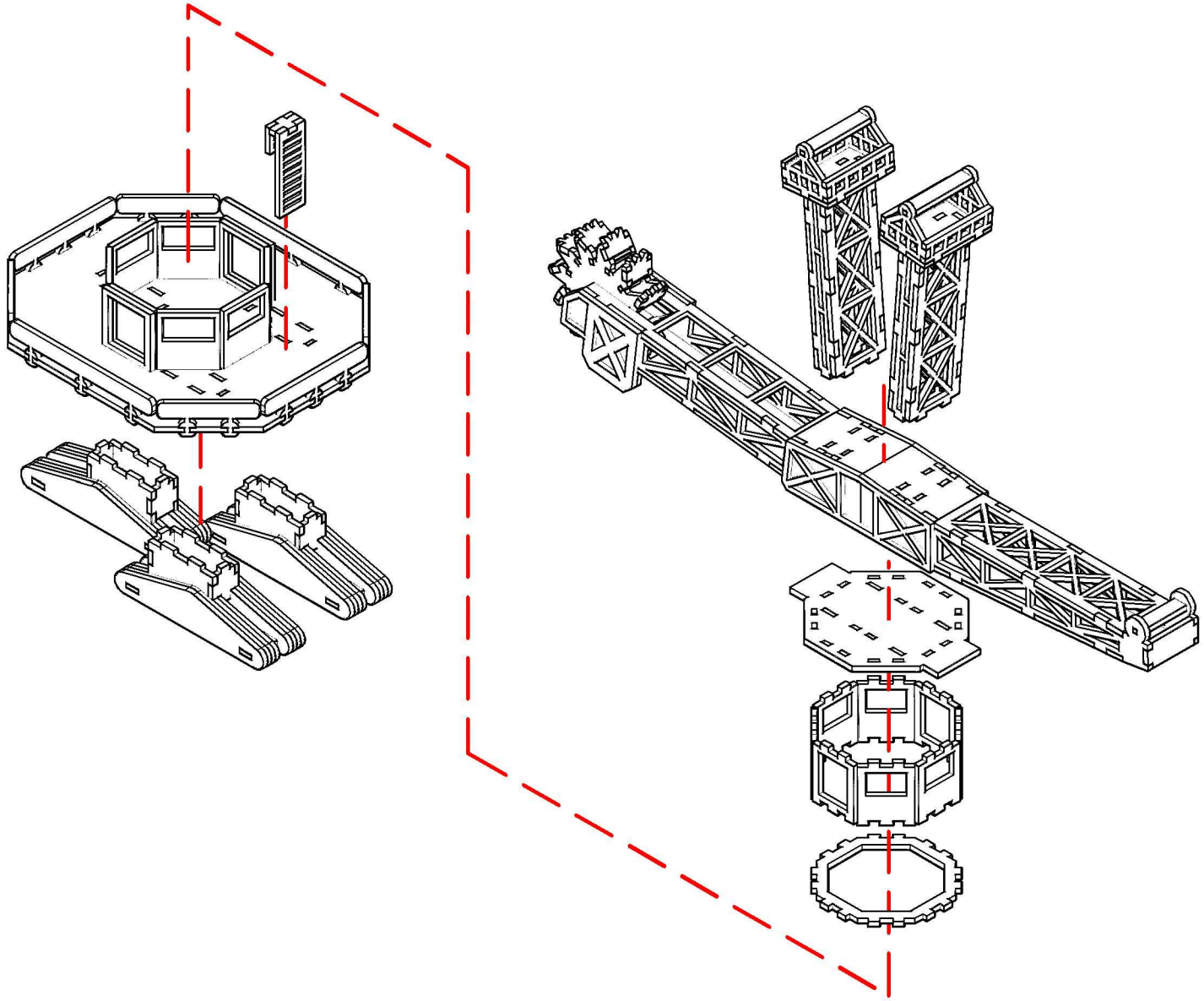

LASER CRAFT WORKSHOP

BEHEMOTH

ASSEMBLY