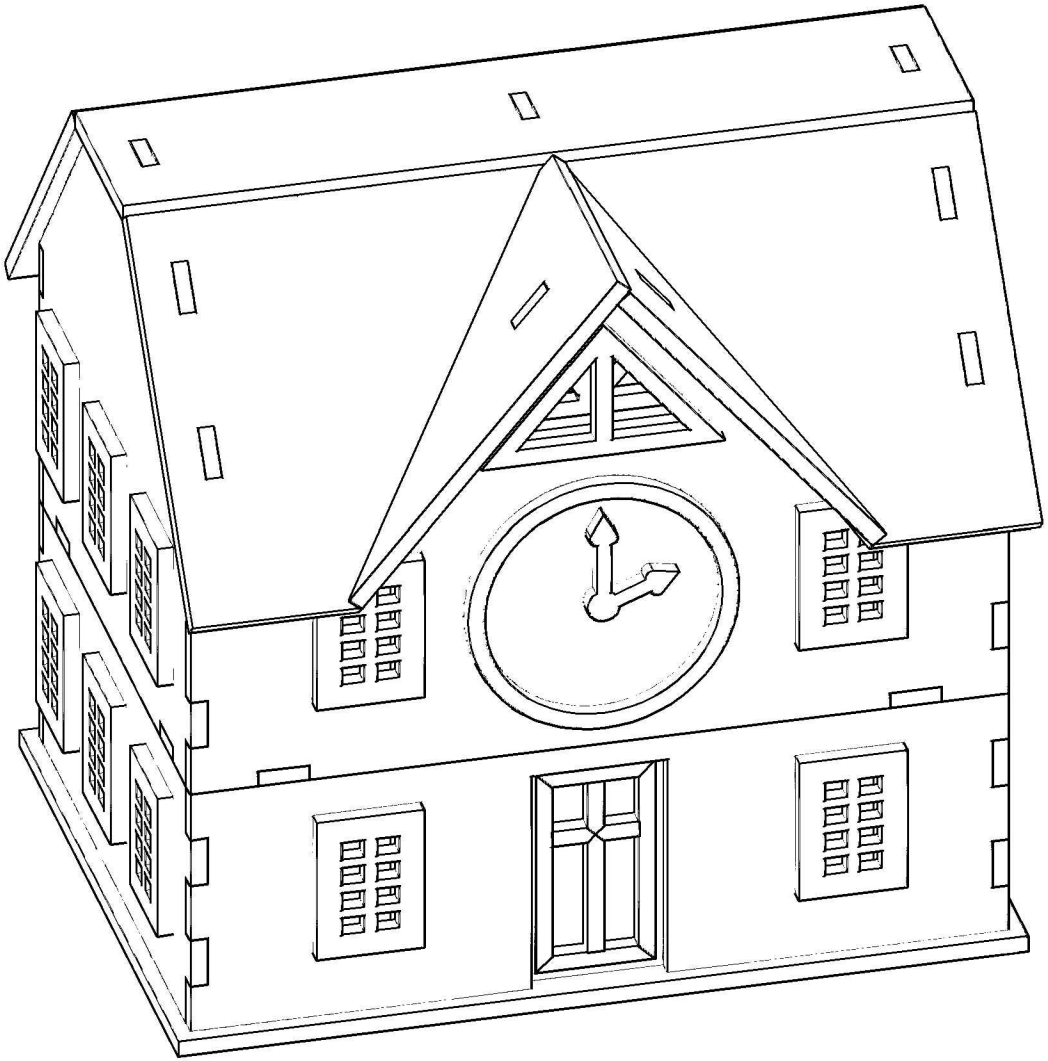

LASER CRAFT WORKSHOP

BELLA

ASSEMBLED

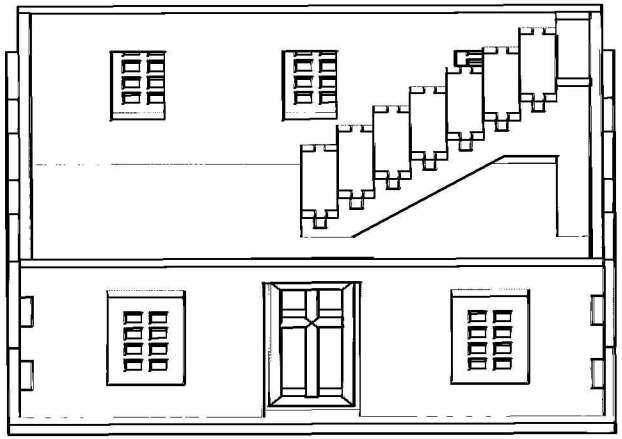

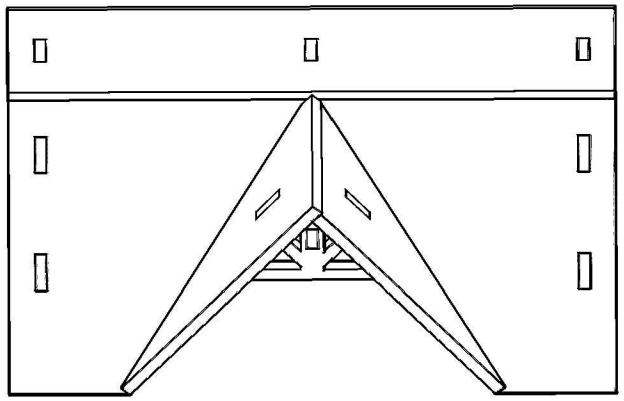

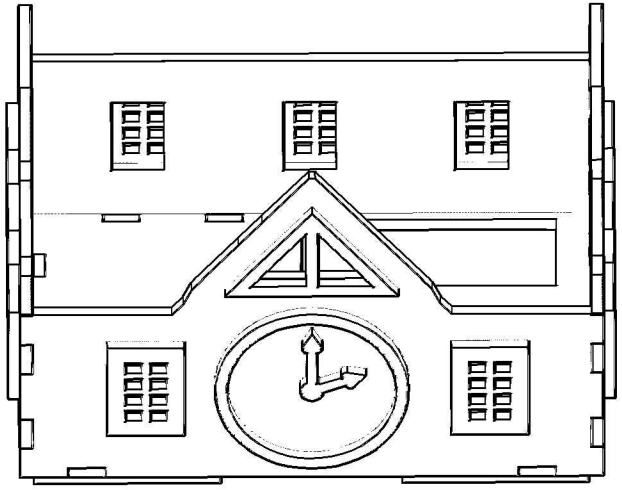

LASER CRAFT WORKSHOP

BELLA

LAYERS

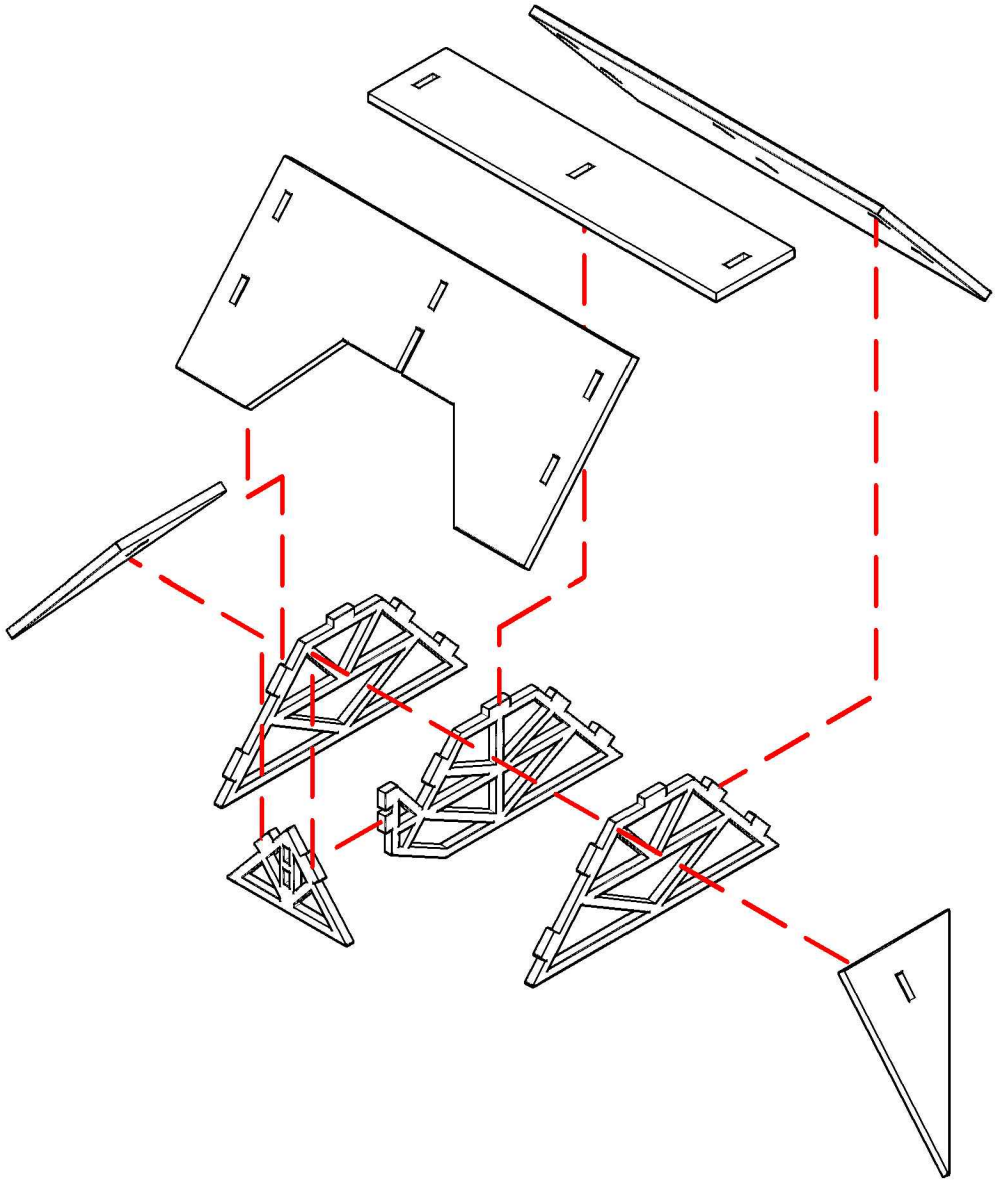

LASER CRAFT WORKSHOP

BELLA

ROOF

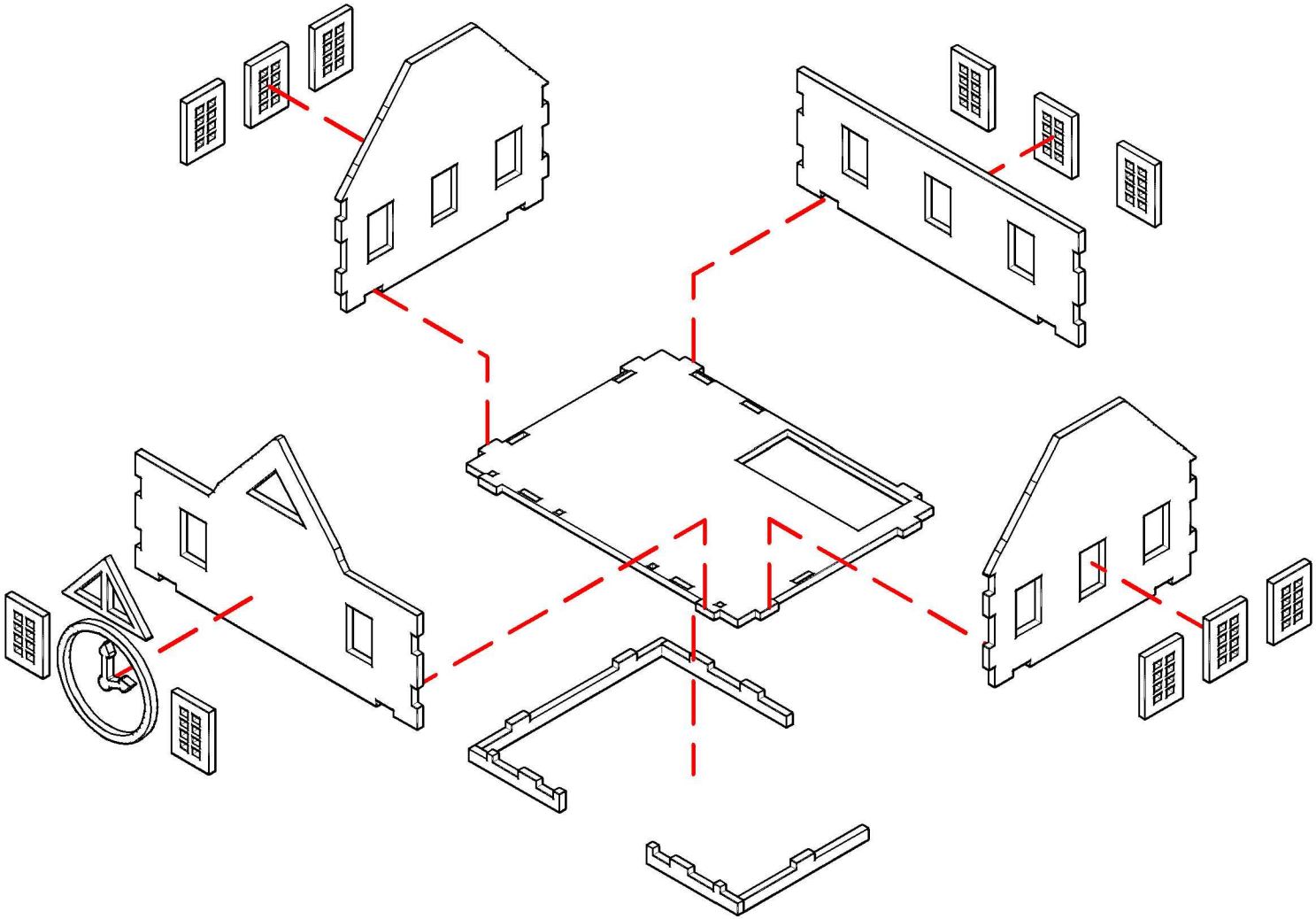

LASER CRAFT WORKSHOP

BELLA

UPPER FLOOR

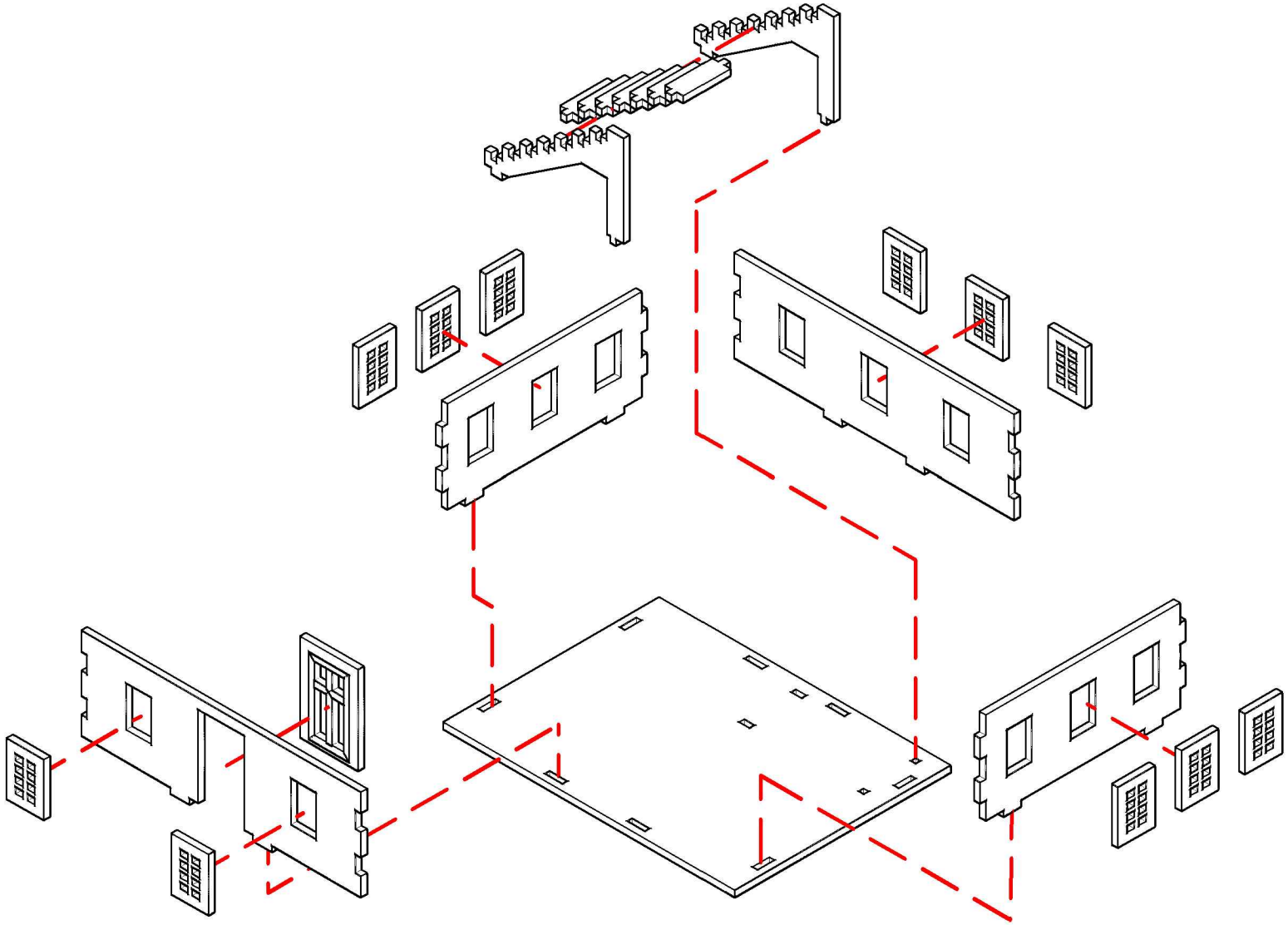

LASER CRAFT WORKSHOP

BELLA

LOWER FLOOR