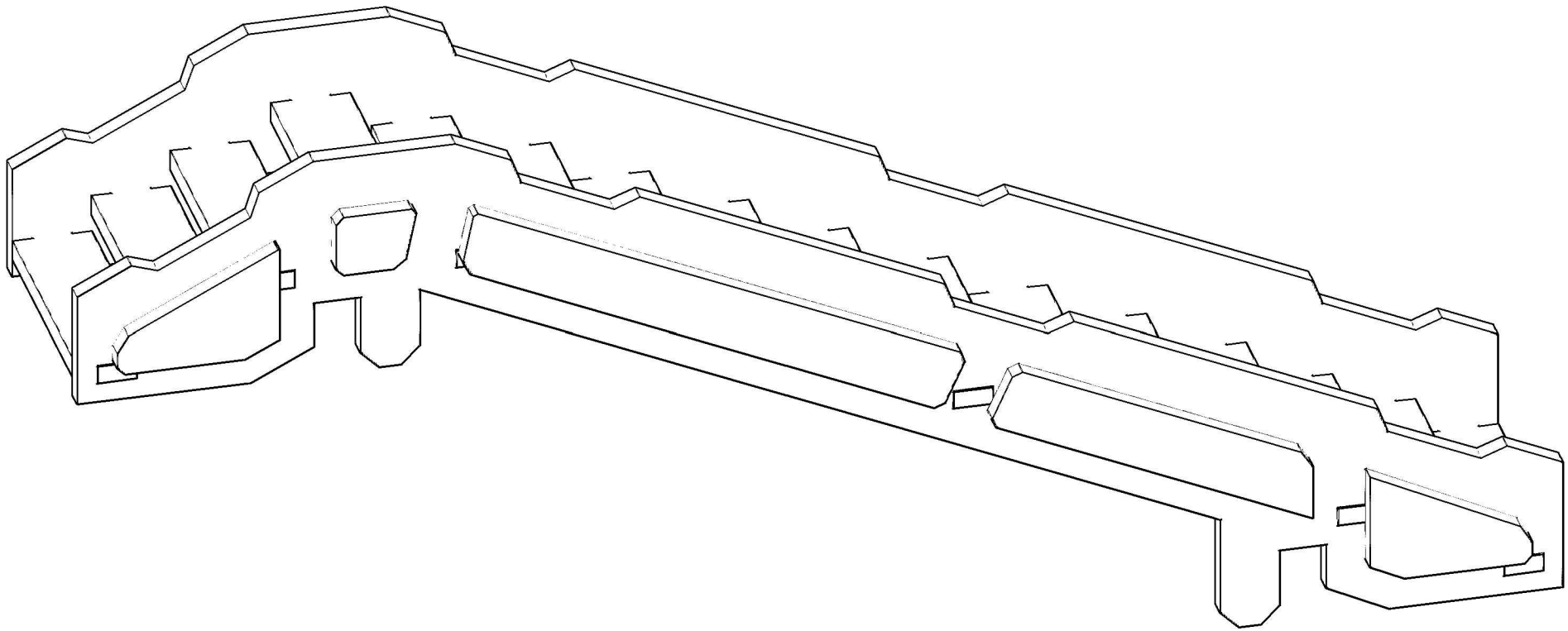

LASER CRAFT WORKSHOP

S38 STEP-DOWN BRIDGE

ASSEMBLED

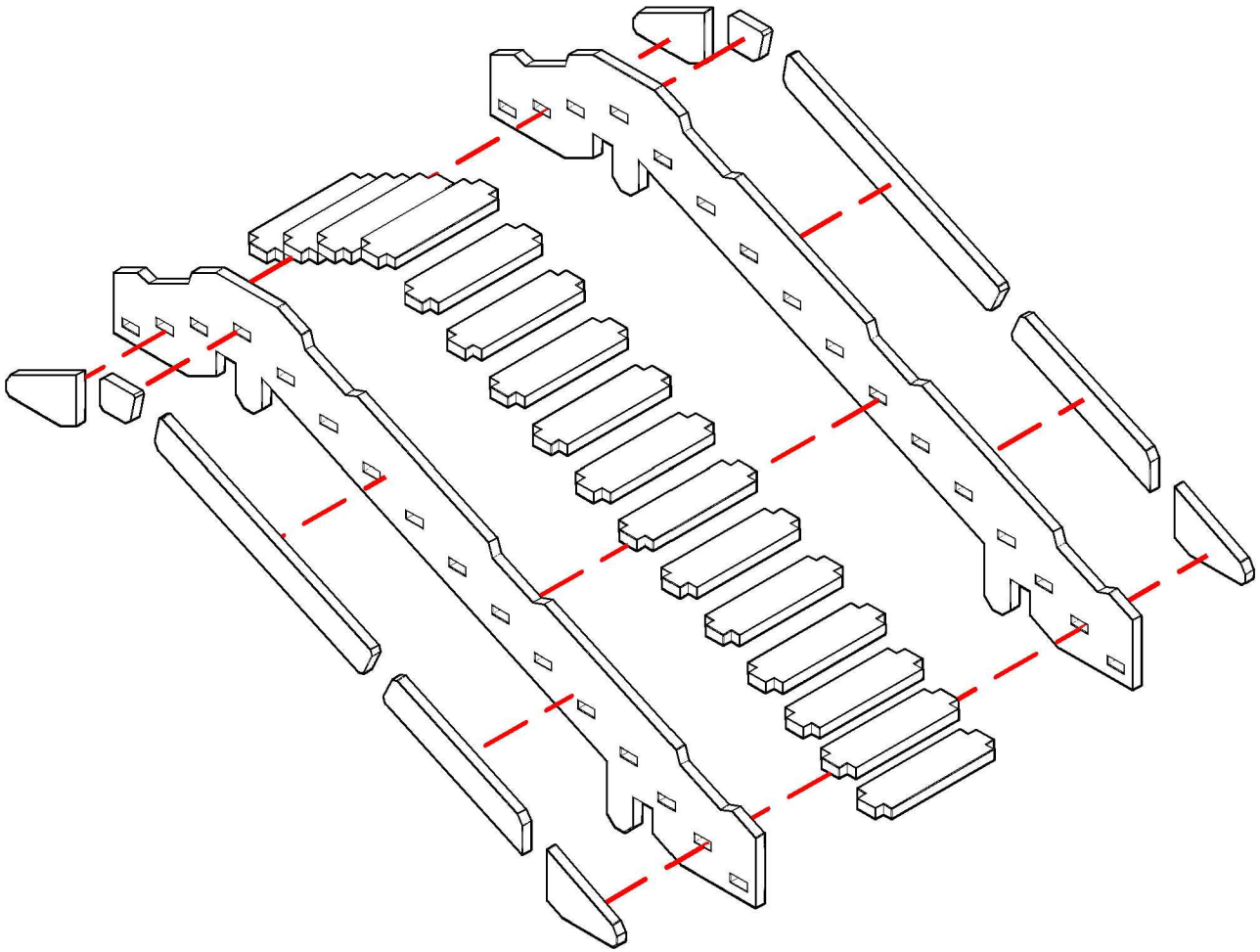

LASER CRAFT WORKSHOP

S38 STEP-DOWN BRIDGE

ASSEMBLY