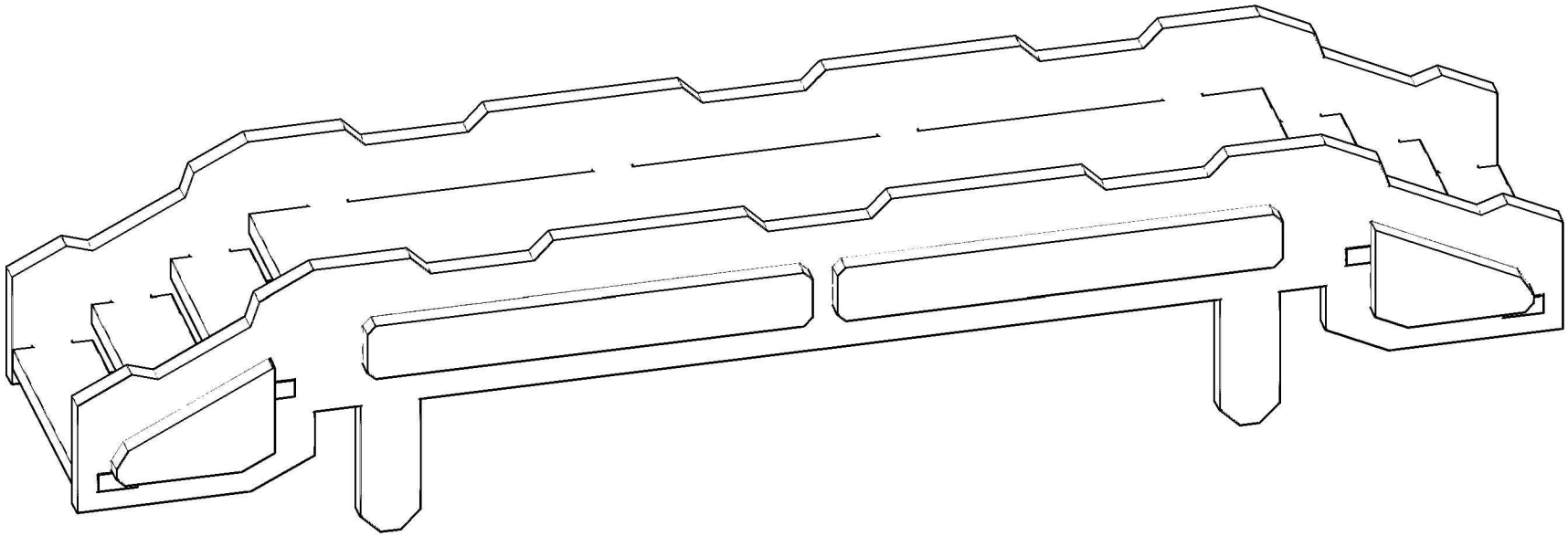

LASER CRAFT WORKSHOP

S38 ARMORED BRIDGE

ASSEMBLED

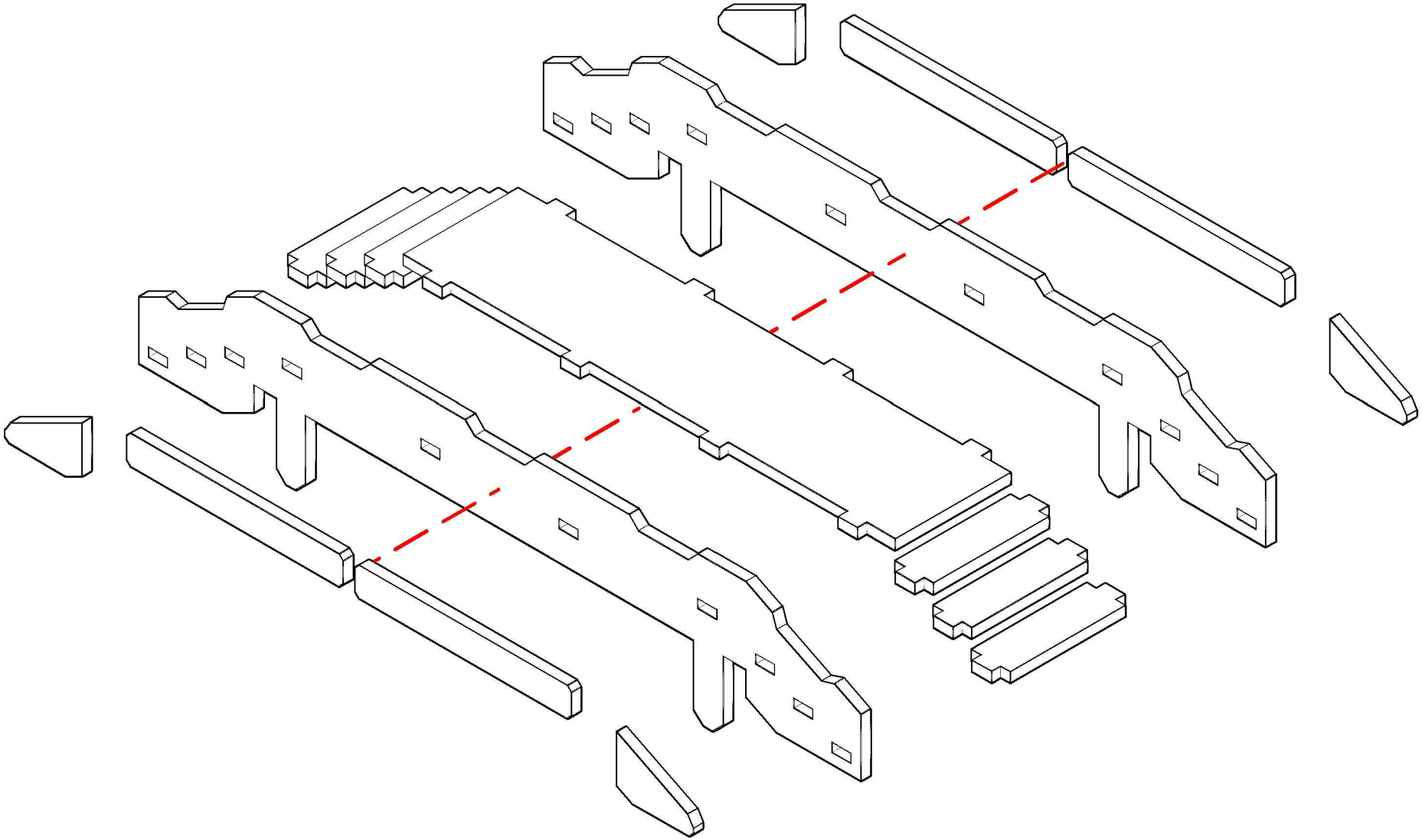

LASER CRAFT WORKSHOP

S38 ARMORED BRIDGE

ASSEMBLY