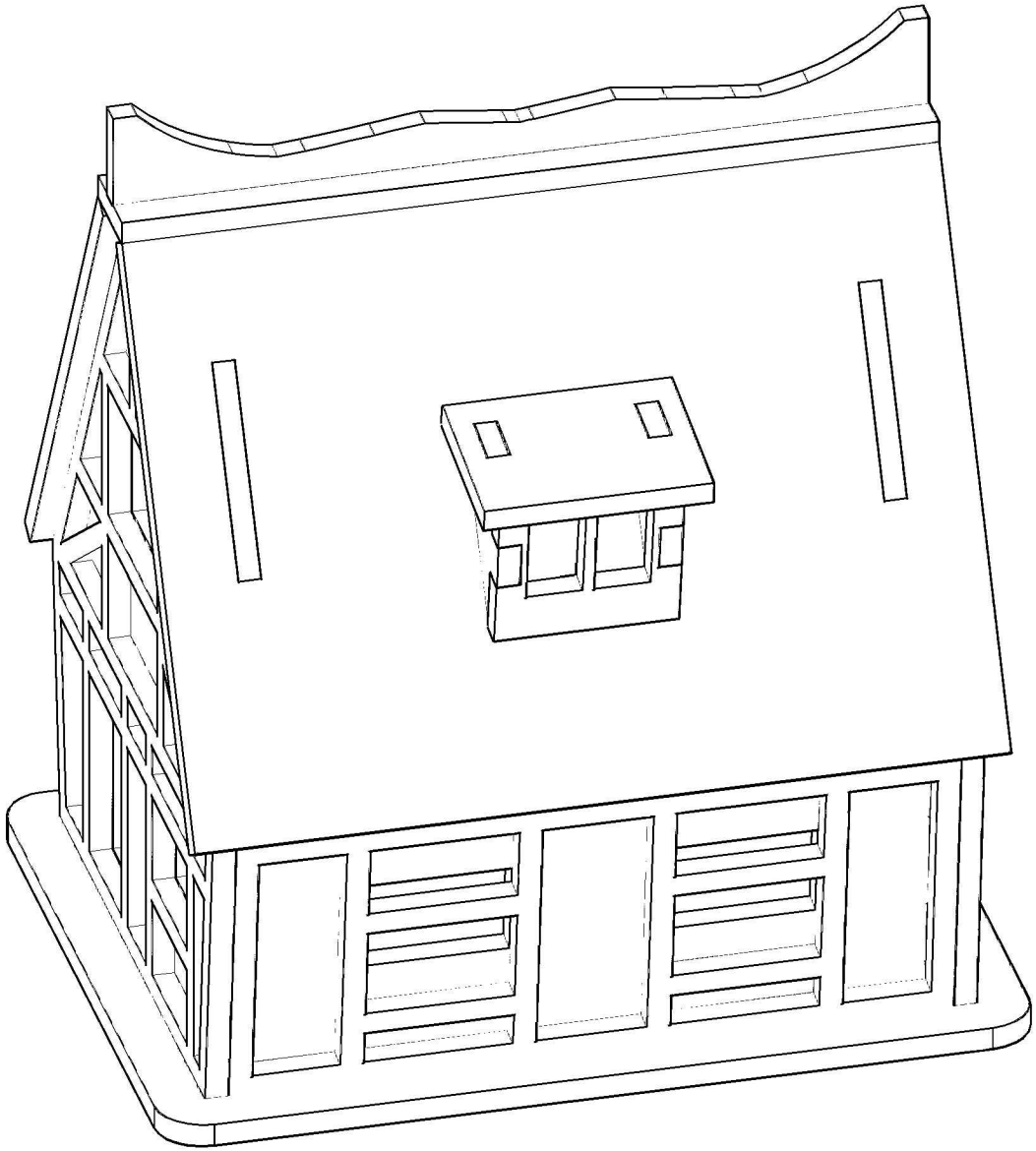

LASER CRAFT WORKSHOP

SMALL HOUSE

ASSEMBLED

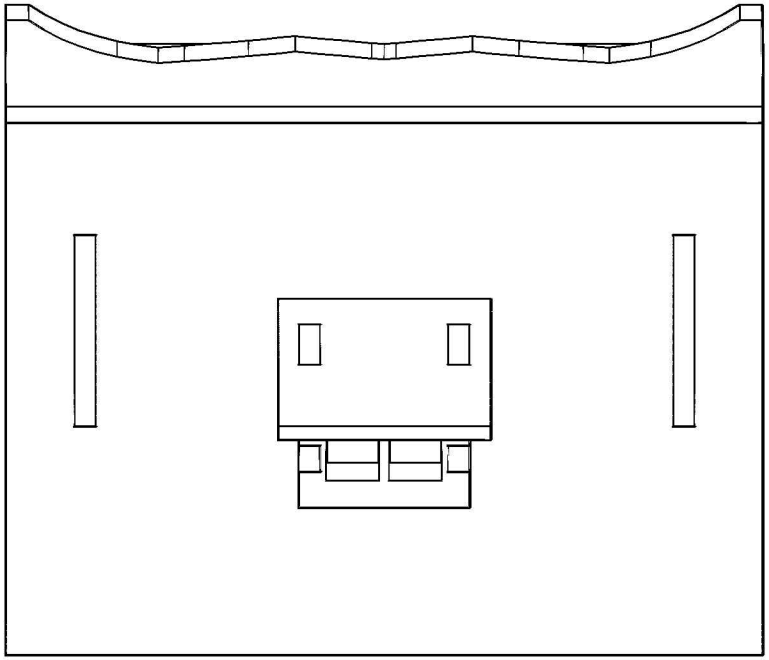

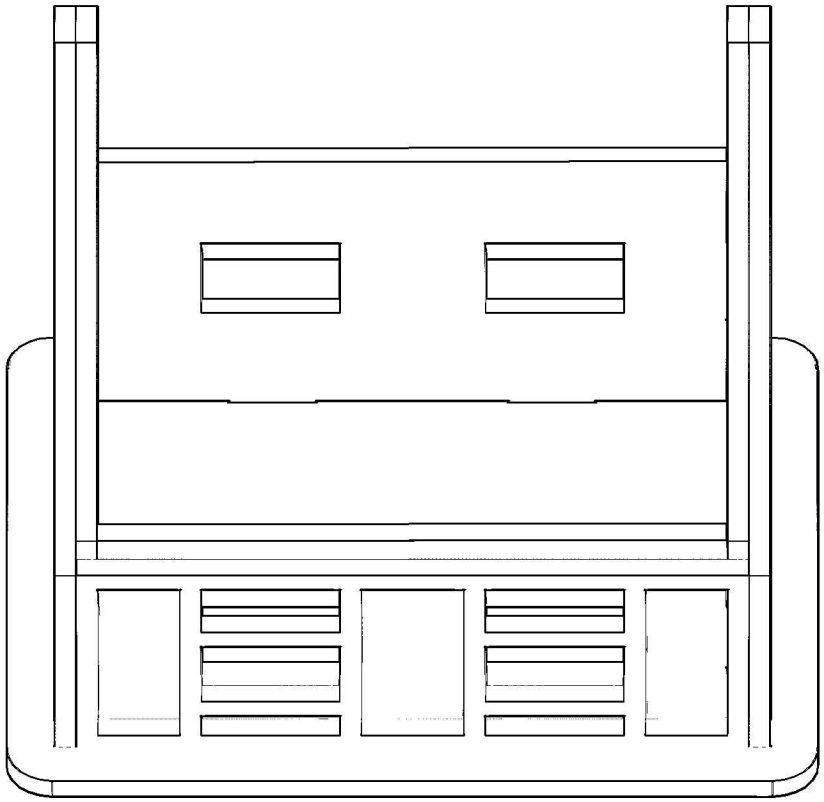

LASER CRAFT WORKSHOP

SMALL HOUSE

LAYERS

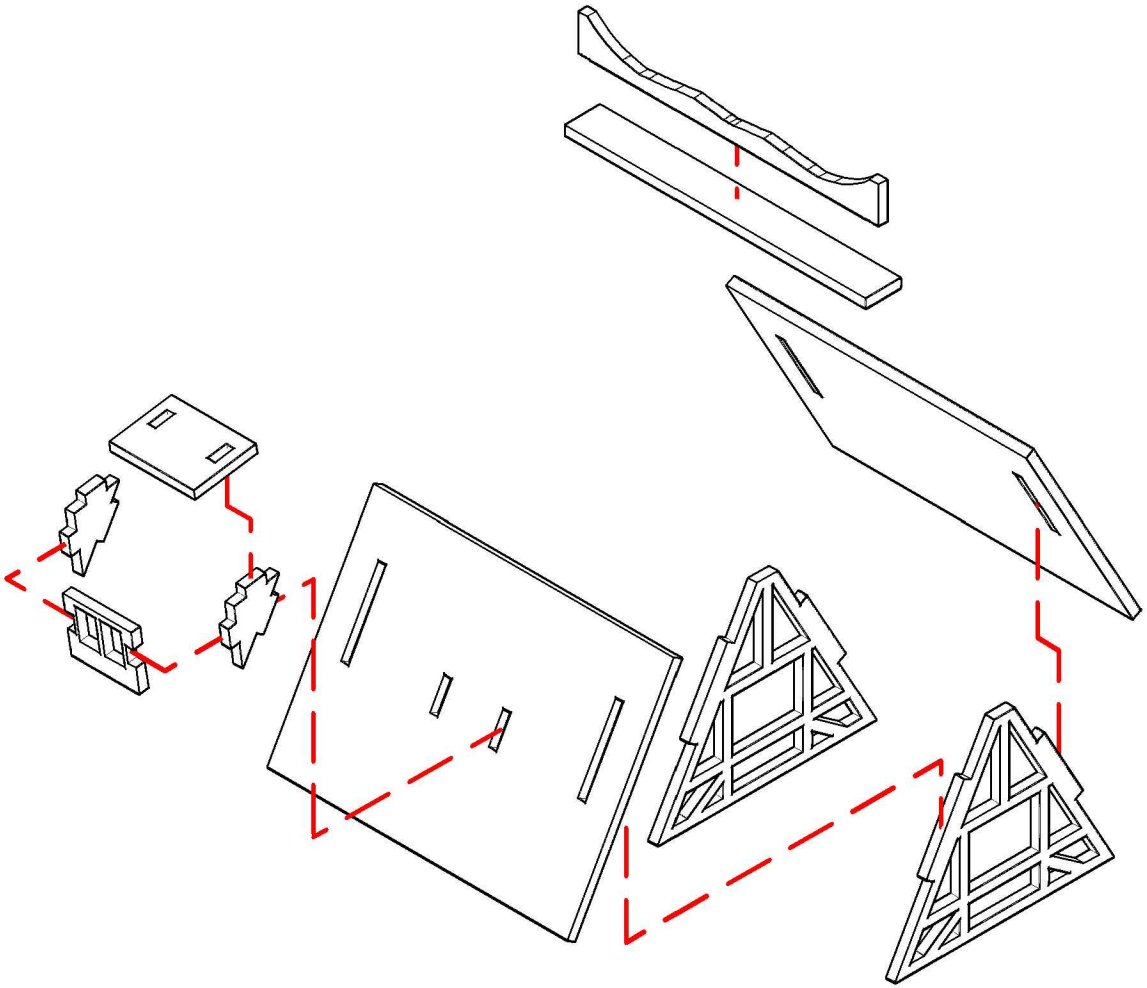

LASER CRAFT WORKSHOP

SMALL HOUSE

ROOF

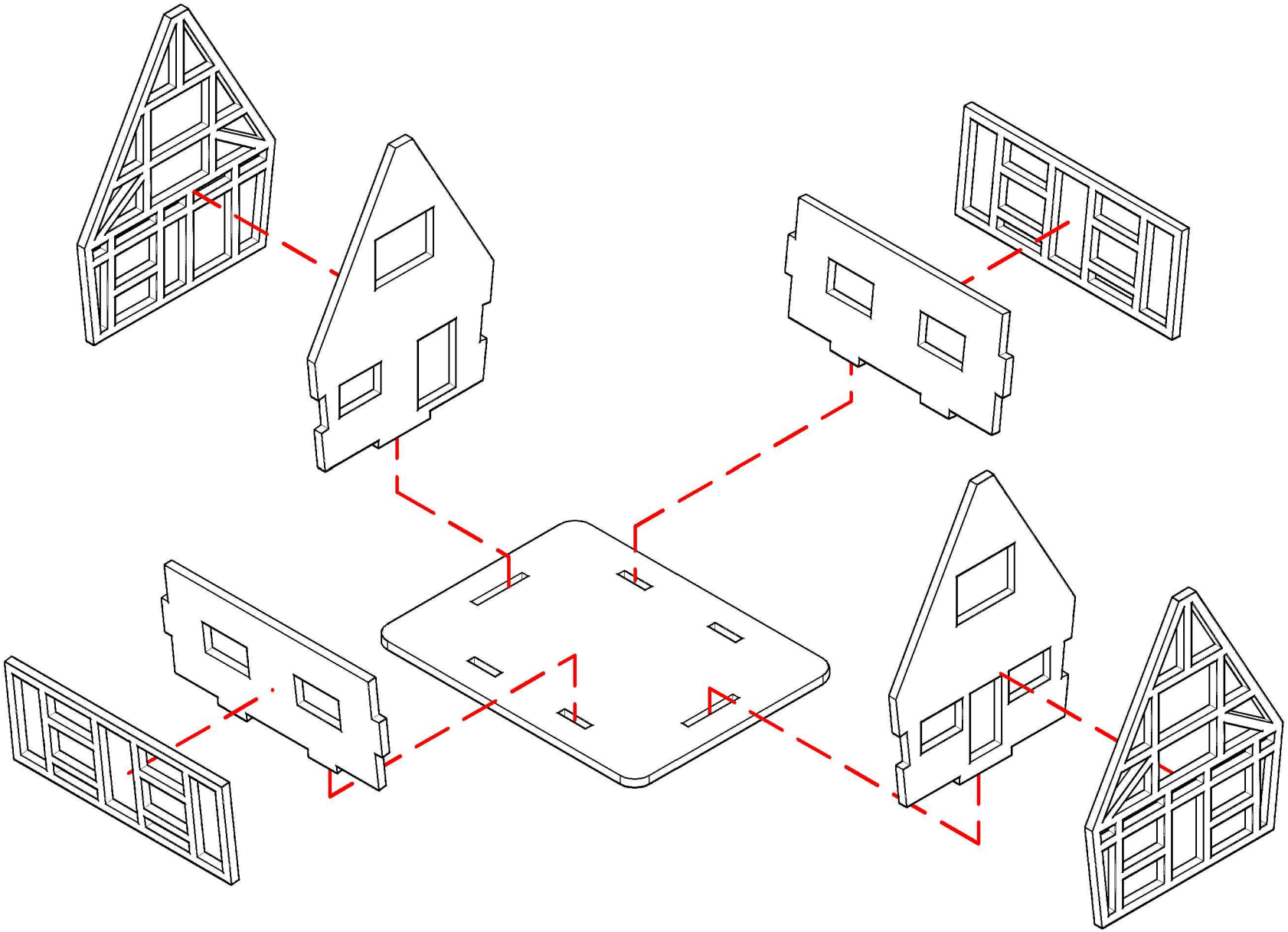

LASER CRAFT WORKSHOP

SMALL HOUSE

MAIN FLOOR